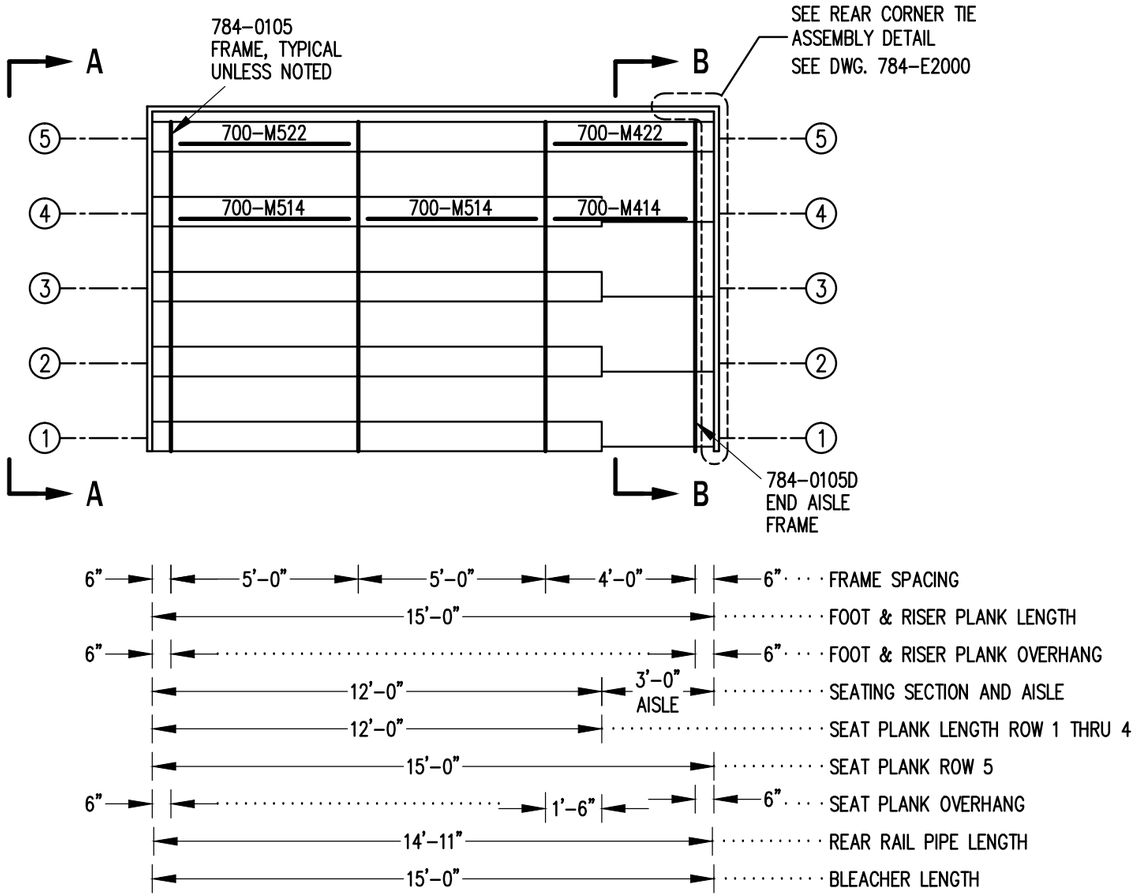

SEATING & FRAMING PLAN

1/4" = 1'-0"

42 NET SEATS @ 18" PER SEAT

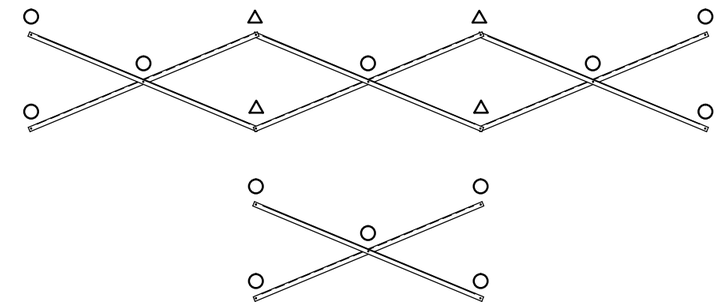

X-BRACE DETAIL

N.T.S.

○ 7/16" X 1" GALV. MACH. BOLT

△ 7/16" X 1.1/2" GALV. MACH. BOLT

Outdoor Aluminum
P.O. BOX 118
GENEVA, ALABAMA 36340
334-684-2296

SCALE AS NOTED	REVISIONS	BY	DATE
DATE 11/2/11			
DR'N GDK CKD			
AP'VD			

TITLE: DLW 5-15 SEATING/FRAMING PLAN W/ END AISLE

NO. 784-E2063

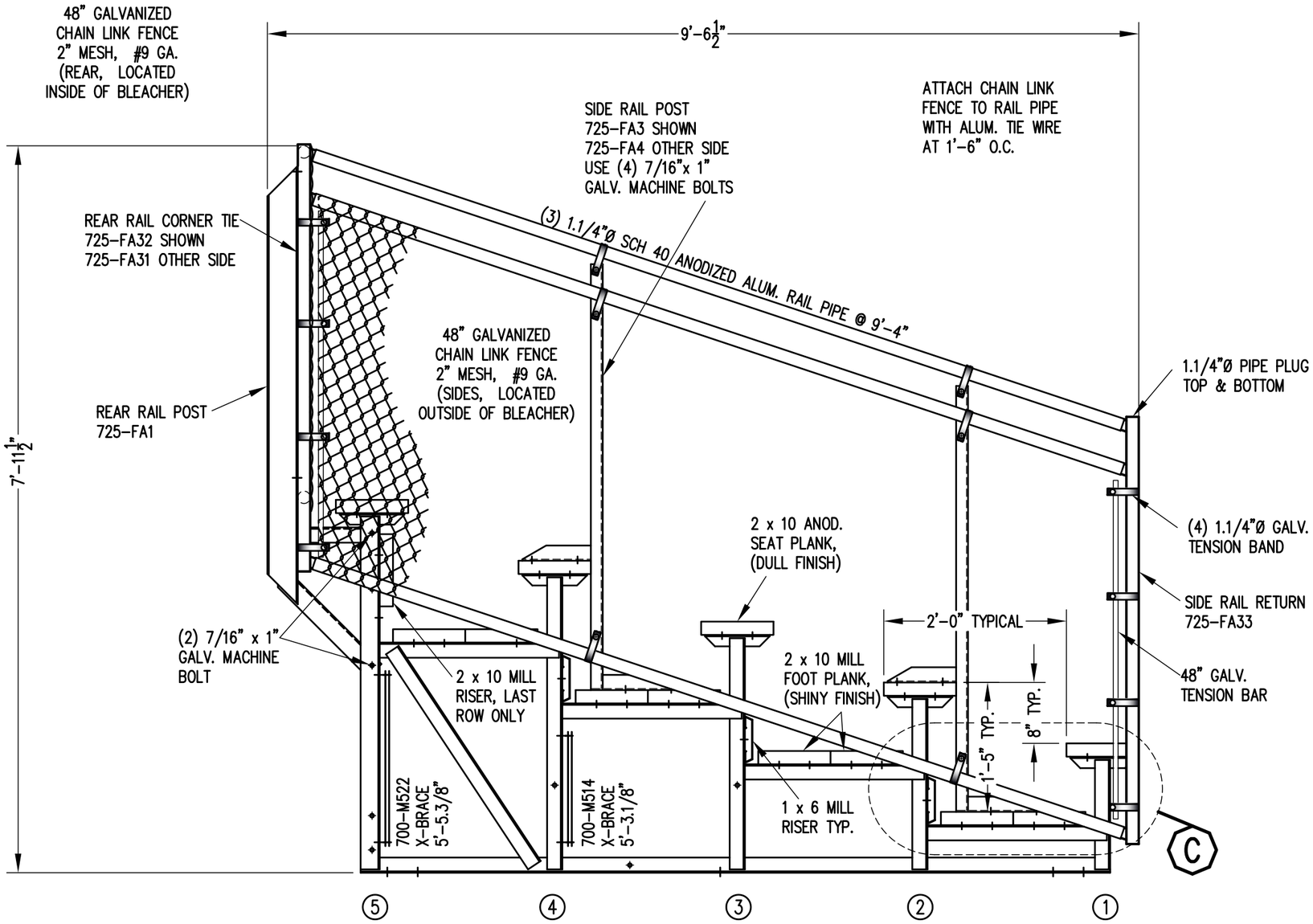

VIEW AA

3/4" = 1'-0"

GUARDRAIL SYSTEM NOT SHOWN FOR CLARITY

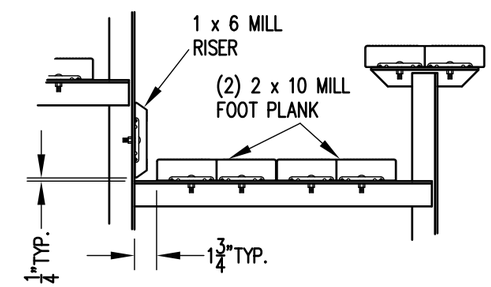

DETAIL C

1" = 1'-0"

Outdoor Aluminum

P.O. BOX 118
GENEVA, ALABAMA 36340
334-684-2296

SCALE AS NOTED	REVISIONS	BY	DATE
DATE 11/2/11			
DR'N GDK CKD			
AP'VD			

TITLE: DLW 5 ROW VIEW (15'-0" W/ END AISLE)

NO. 784-E2085

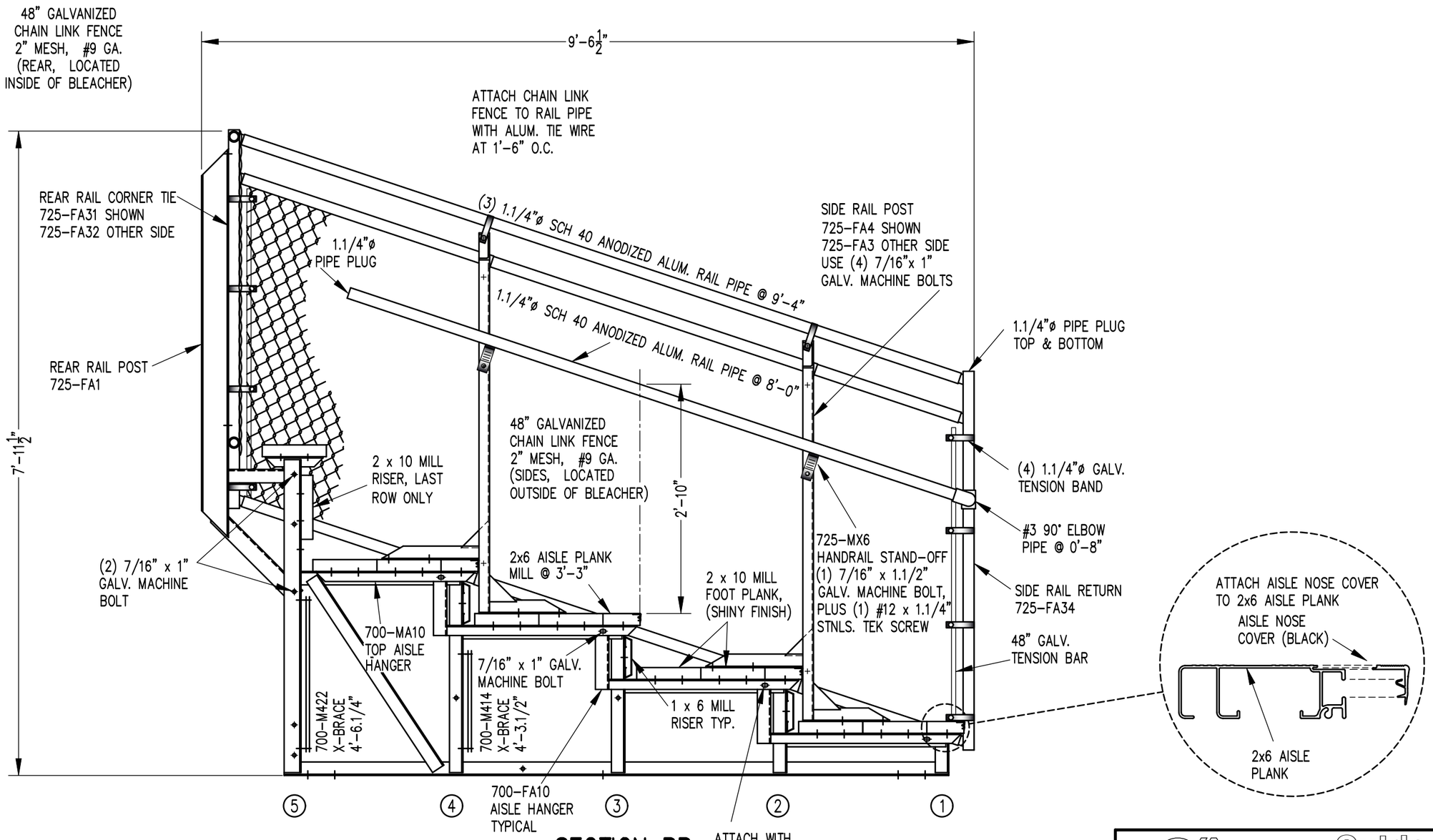

SECTION BB

3/4" = 1'-0"

NOTE: ALL AISLE HANGERS – TWO PER LOCATION REQUIRED, TYPICAL

Outdoor Aluminum
P.O. BOX 118
GENEVA, ALABAMA 36340
334-684-2296

SCALE AS NOTED	REVISIONS	BY	DATE
DATE 11/2/11			
DR'N GDK CKD			
AP'VD			

TITLE: DLW 5 ROW SECTION (15'-0" W/ AISLE)

NO. 784-E2086

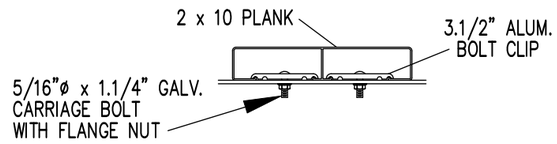

BOLT CLIP DETAIL

1.1/2" = 1'-0"

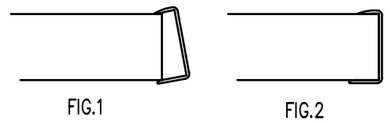

1) LOCATE THE CHANNEL END CAP AS SHOWN IN FIG. 1.
2) TAP END CAP INTO PLACE WITH RUBBER MALLET OR SOFT WOOD. FIG.2
3) DRILL 5/32" HOLES THROUGH THE BOTTOM FLANGE AND THE BOTTOM OUTSIDE PLANK FLANGES OF EACH PLANK. INSTALL 5/32" POP RIVETS.

END CAP DETAIL

N.T.S.

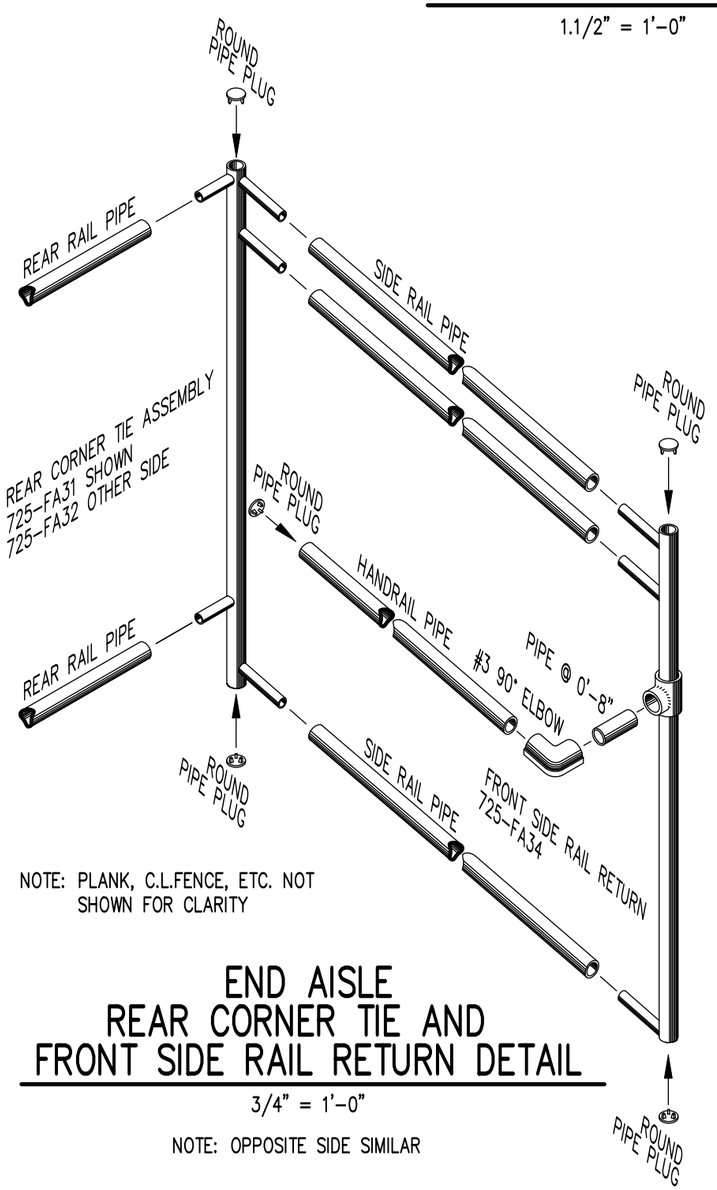

NOTE: PLANK, C.L.FENCE, ETC. NOT SHOWN FOR CLARITY

END AISLE REAR CORNER TIE AND FRONT SIDE RAIL RETURN DETAIL

3/4" = 1'-0"

NOTE: OPPOSITE SIDE SIMILAR

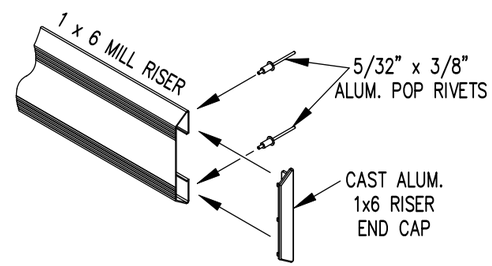

1 x 6 RISER END CAP

N.T.S.

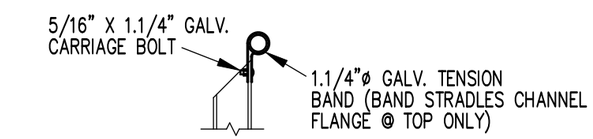

TOP RAIL

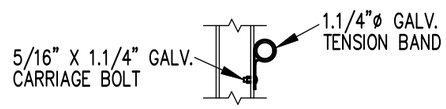

2ND RAIL

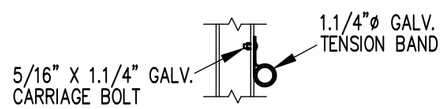

BOTTOM RAIL

RAIL PIPE ATTACHMENT

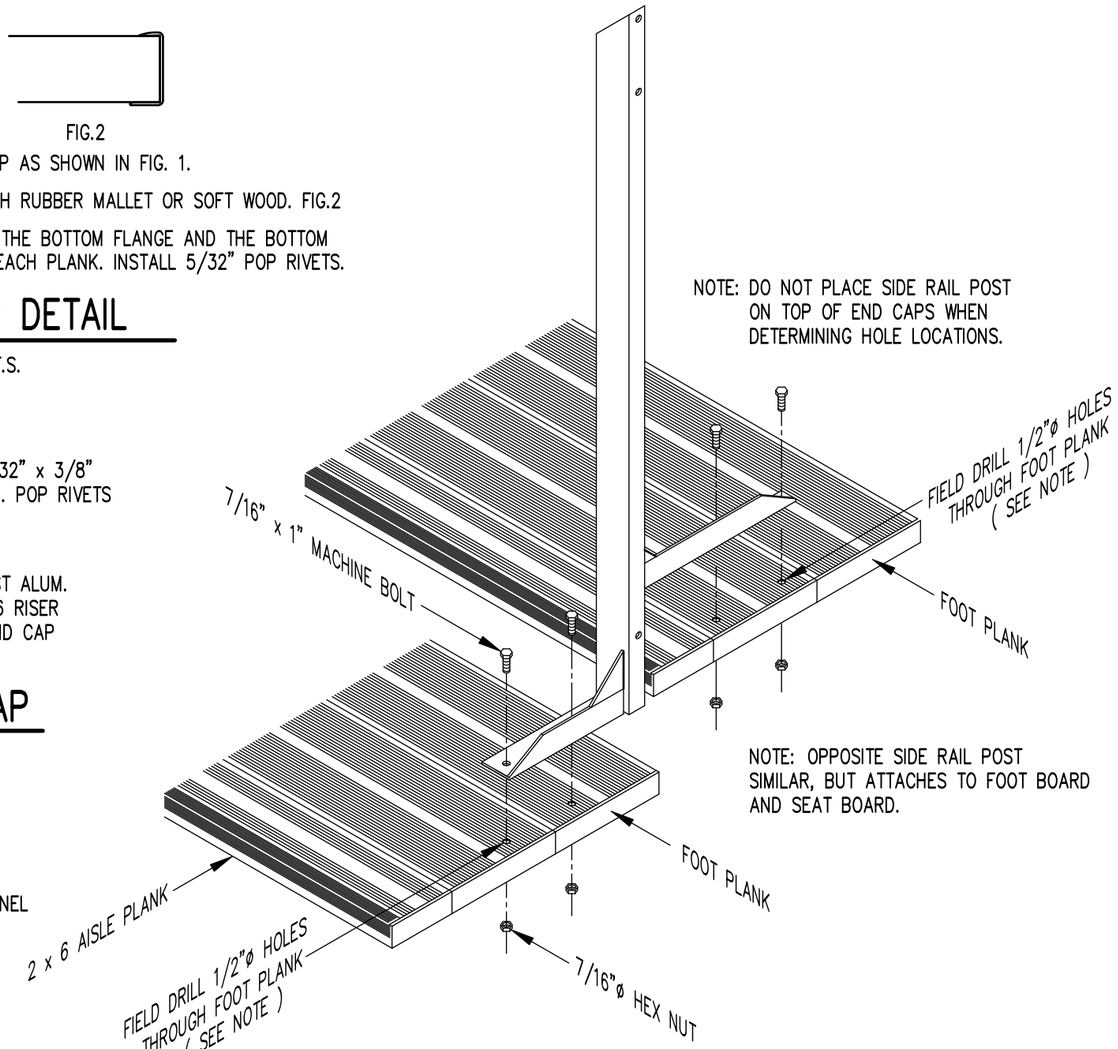

NOTE: DO NOT PLACE SIDE RAIL POST ON TOP OF END CAPS WHEN DETERMINING HOLE LOCATIONS.

NOTE: OPPOSITE SIDE RAIL POST SIMILAR, BUT ATTACHES TO FOOT BOARD AND SEAT BOARD.

TYP. SIDE RAIL POST ATTACHMENT AT END AISLE

1" = 1'-0"

Outdoor Aluminum
P.O. BOX 118
GENEVA, ALABAMA 36340
334-684-2296

SCALE AS NOTED	REVISIONS	BY	DATE
DATE 11/2/11	ADJUSTED FOR FLANGE NUT	GDK	05/24
DR'N GDK CKD			
AP'VD			

TITLE: TYPICAL DETAILS W/ END AISLE

NO. 784-E2000