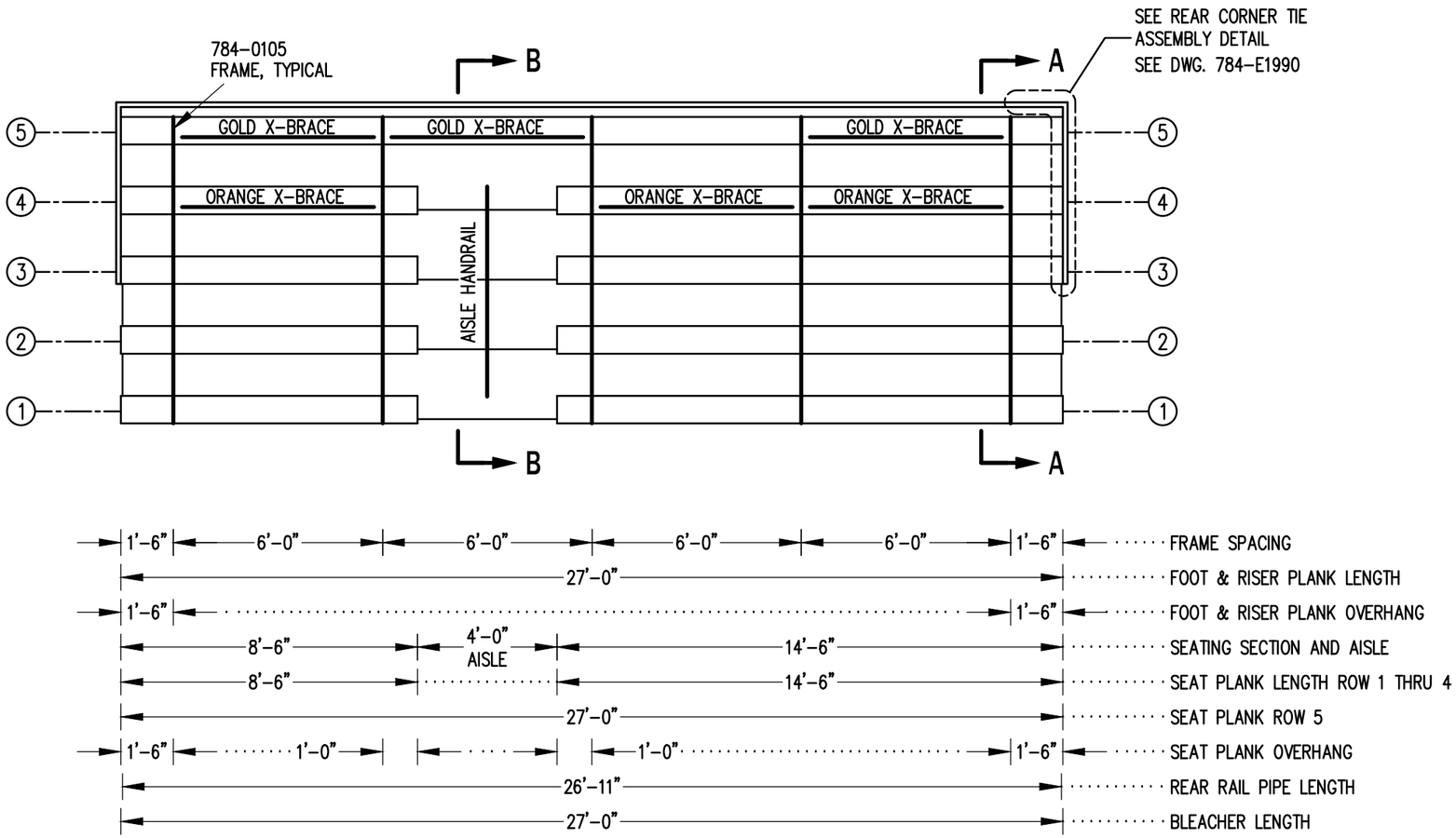

SEATING & FRAMING PLAN

1/4" = 1'-0"

74 NET SEATS @ 18" PER SEAT

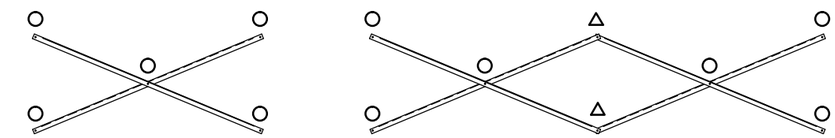

X-BRACE DETAIL

N.T.S.

○ 7/16" X 1" GALV. MACH. BOLT

△ 7/16" X 1.1/2" GALV. MACH. BOLT

Outdoor Aluminum
P.O. BOX 118
GENEVA, ALABAMA 36340
334-684-2296

SCALE AS NOTED	REVISIONS	BY	DATE
DATE 11/2/11			
DR'N GDK / CKD			
AP'VD			
TITLE DLW 5-27 SEATING/FRAMING PLAN		NO. 784-E2073	

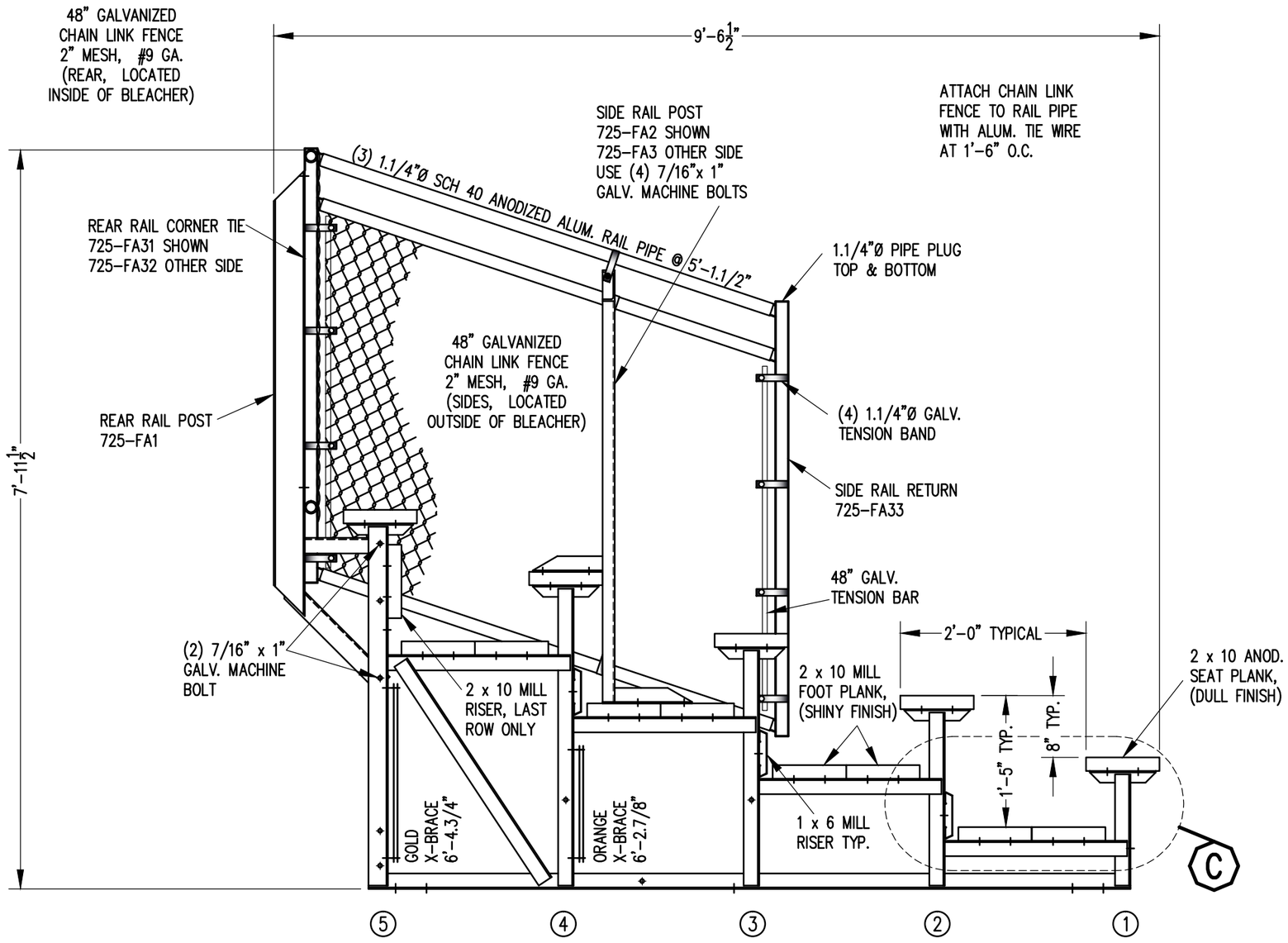

SECTION AA

3/4" = 1'-0"

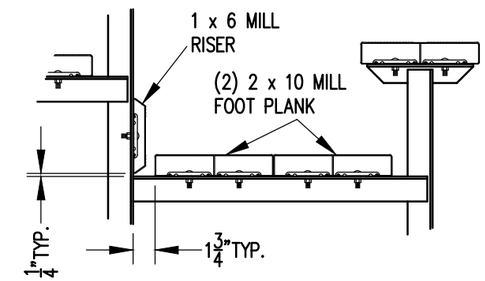

DETAIL C

1" = 1'-0"

Outdoor Aluminum

P.O. BOX 118
GENEVA, ALABAMA 36340
334-684-2296

SCALE AS NOTED	REVISIONS	BY	DATE
DATE 11/2/11			
DR'N GDK / CKD			
AP'VD			
TITLE DLW 5 ROW SECTION		NO. 784-E2083	

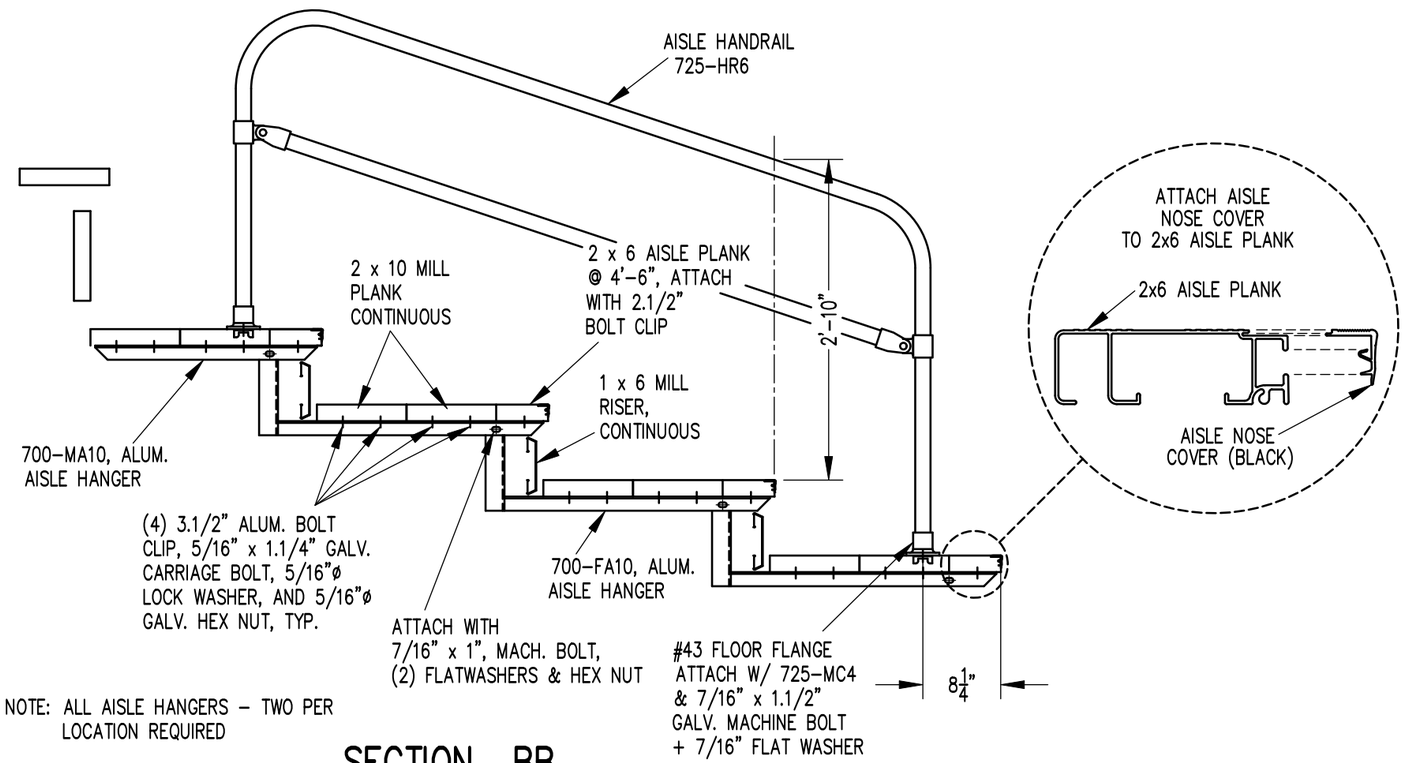

NOTE: ALL AISLE HANGERS - TWO PER LOCATION REQUIRED

SECTION BB

3/4" = 1'-0"

Outdoor Aluminum
P.O. BOX 118
GENEVA, ALABAMA 36340
334-684-2296

SCALE 3/4"=1'-0"	REVISIONS	BY	DATE
DATE 11/2/11	ADJUSTED FOR FLANGE NUT	GDK	05/24
DR'N GDK CKD			
AP'VD			
TITLE DLW 5 ROW AISLE SECTION		NO. 784-E1995	

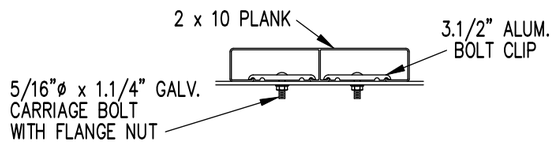

BOLT CLIP DETAIL

1.1/2" = 1'-0"

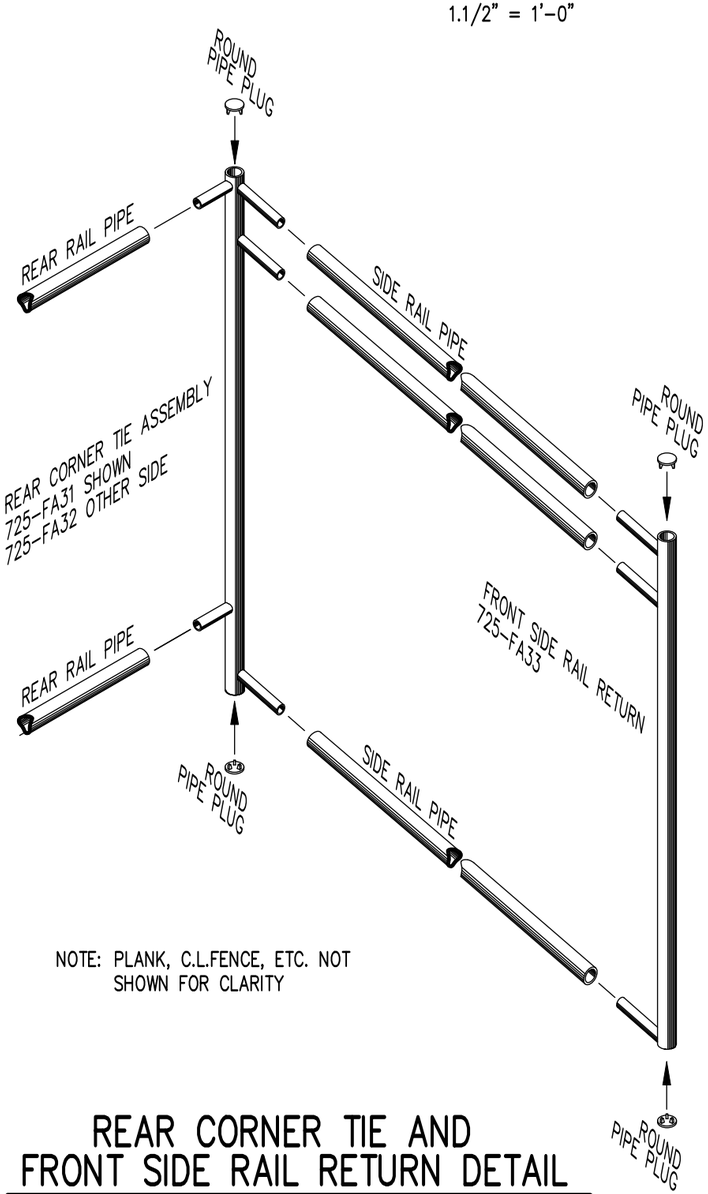

NOTE: PLANK, C.L.FENCE, ETC. NOT SHOWN FOR CLARITY

REAR CORNER TIE AND FRONT SIDE RAIL RETURN DETAIL

3/4" = 1'-0"

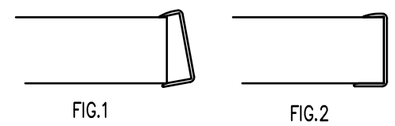

1) LOCATE THE CHANNEL END CAP AS SHOWN IN FIG. 1.

2) TAP END CAP INTO PLACE WITH RUBBER MALLET OR SOFT WOOD. FIG.2

3) DRILL 5/32" HOLES THROUGH THE BOTTOM FLANGE AND THE BOTTOM OUTSIDE PLANK FLANGES OF EACH PLANK. INSTALL 5/32" POP RIVETS.

END CAP DETAIL

N.T.S.

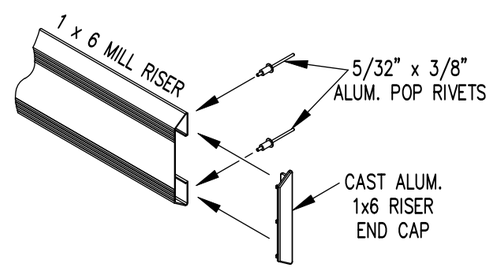

1 x 6 RISER END CAP

N.T.S.

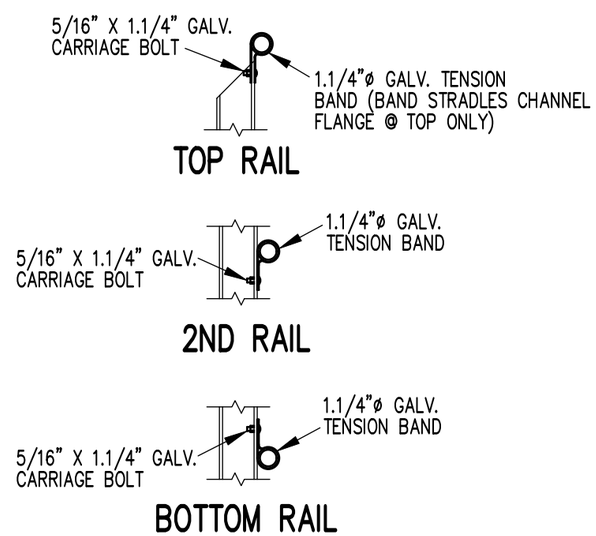

RAIL PIPE ATTACHMENT

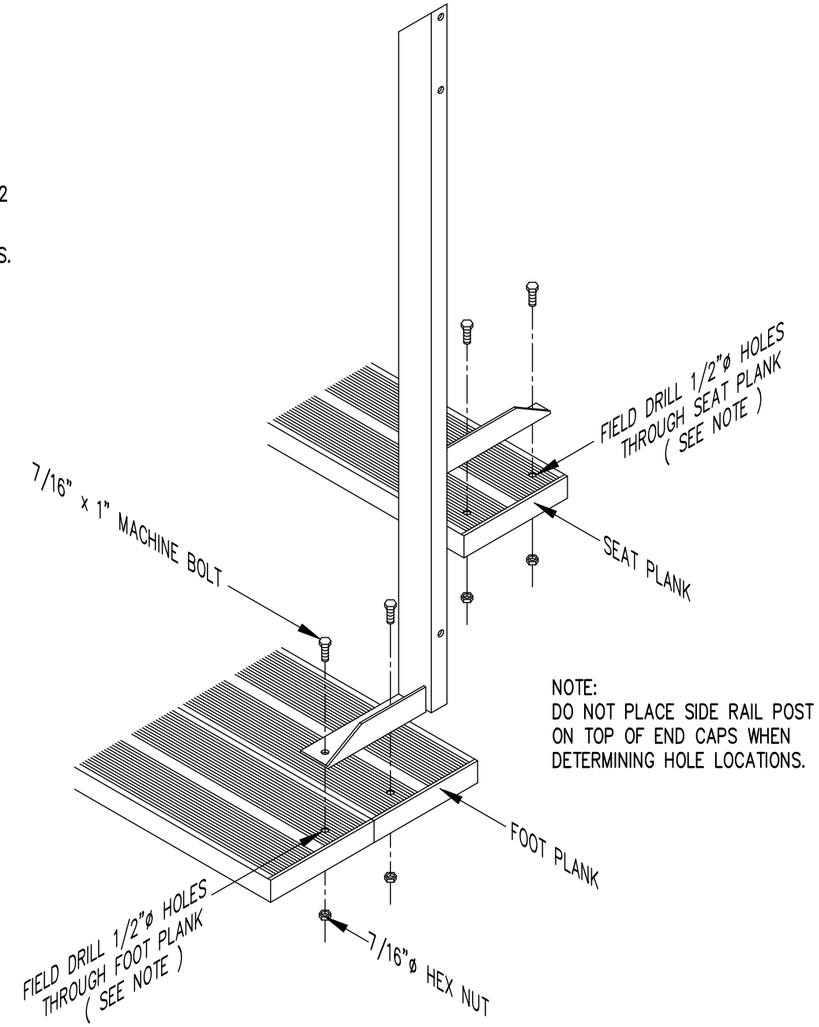

NOTE:
DO NOT PLACE SIDE RAIL POST ON TOP OF END CAPS WHEN DETERMINING HOLE LOCATIONS.

TYP. SIDE RAIL POST ATTACHMENT

1" = 1'-0"

Outdoor Aluminum
P.O. BOX 118
GENEVA, ALABAMA 36340
334-684-2296

SCALE AS NOTED	REVISIONS	BY	DATE
DATE 11/2/11	ADJUSTED FOR FLANGE NUT	GDK	5/24
DR'N GDK CKD			
AP'VD			

TITLE: TYPICAL DETAILS

NO. 784-E1990