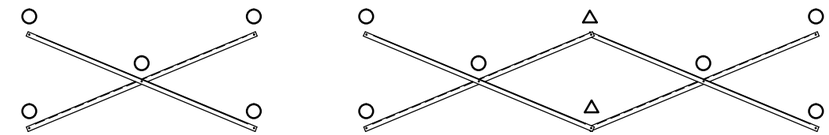

## X-BRACE DETAIL

N.T.S.

○ 7/16" X 1" GALV. MACH. BOLT

△ 7/16" X 1.1/2" GALV. MACH. BOLT

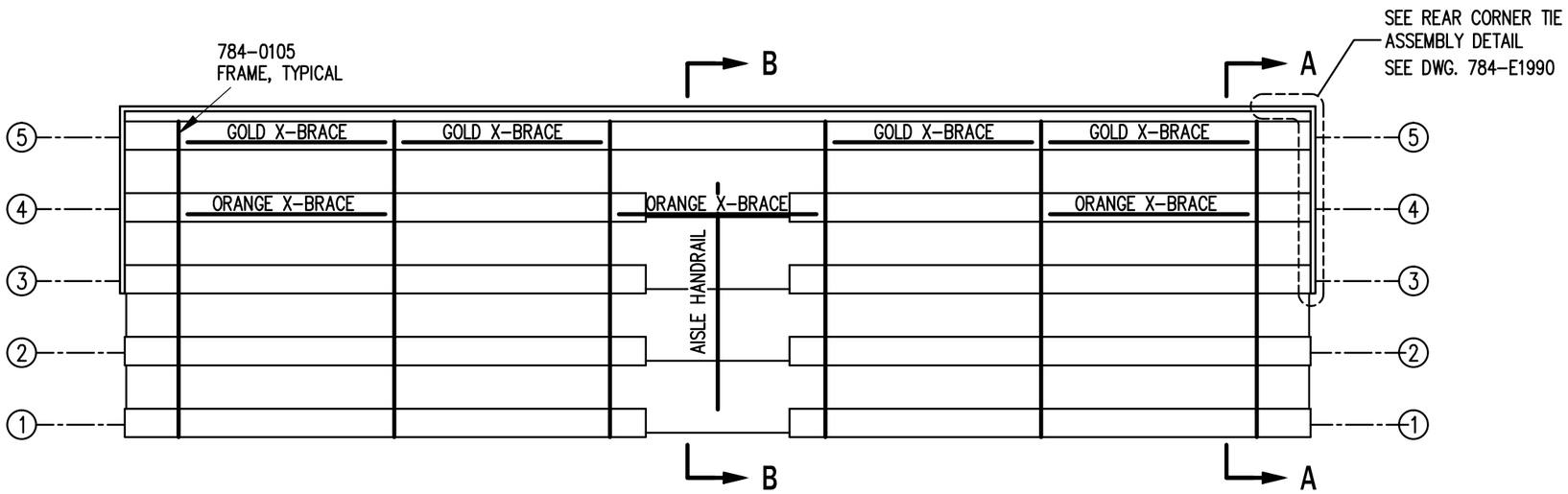


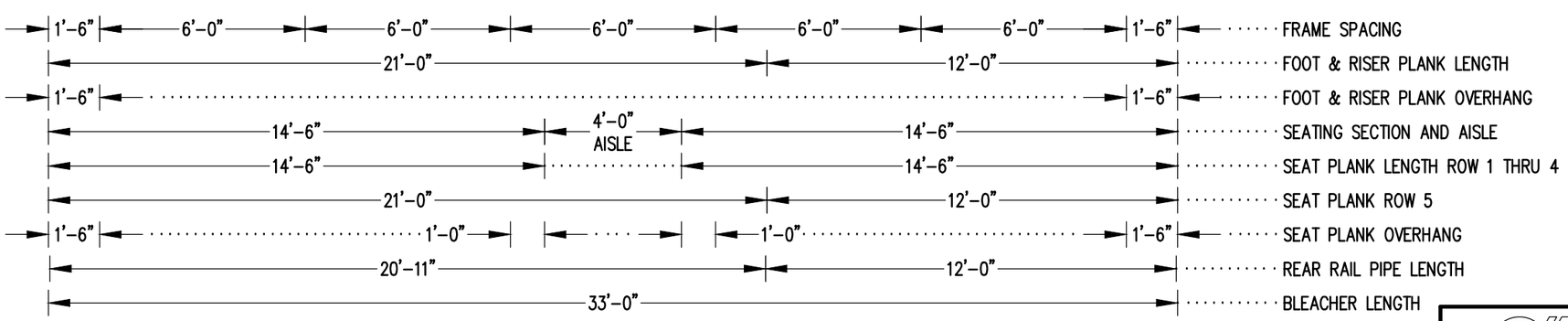


## SEATING & FRAMING PLAN

1/4" = 1'-0"

94 NET SEATS @ 18" PER SEAT


Outdoor Aluminum

P.O. BOX 118
GENEVA, ALABAMA 36340
334-684-2296


| | | | |
|---|---|---|---|
| SCALE AS NOTED | REVISIONS | BY | DATE |
| DATE 11/2/11 | | | |
| DR'N GDK / CKD | | | |
| AP'VD | | | |
| TITLE DLW 5-33 SEATING/FRAMING PLAN | | NO. 784-E2078 | |

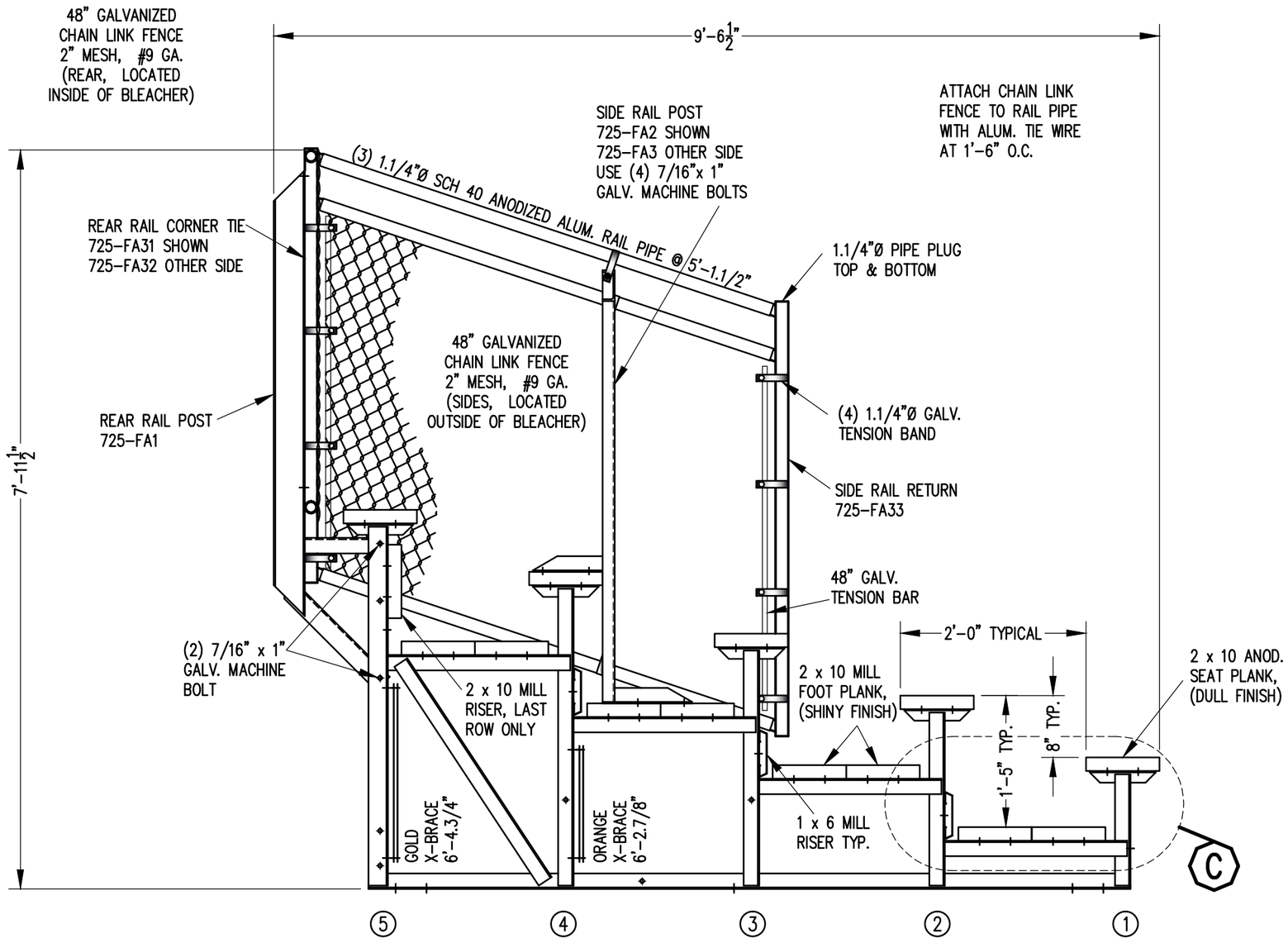


## SECTION AA

3/4" = 1'-0"

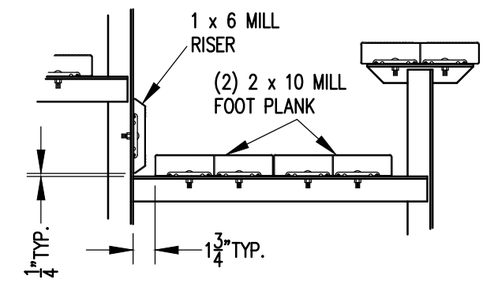


## DETAIL C

1" = 1'-0"

Outdoor Aluminum

P.O. BOX 118
GENEVA, ALABAMA 36340
334-684-2296

| | | | |
|---|---|---|---|
| SCALE AS NOTED | REVISIONS | BY | DATE |
| DATE 11/2/11 | | | |
| DR'N GDK / CKD | | | |
| AP'VD | | | |
| TITLE DLW 5 ROW SECTION | | NO. 784-E2083 | |

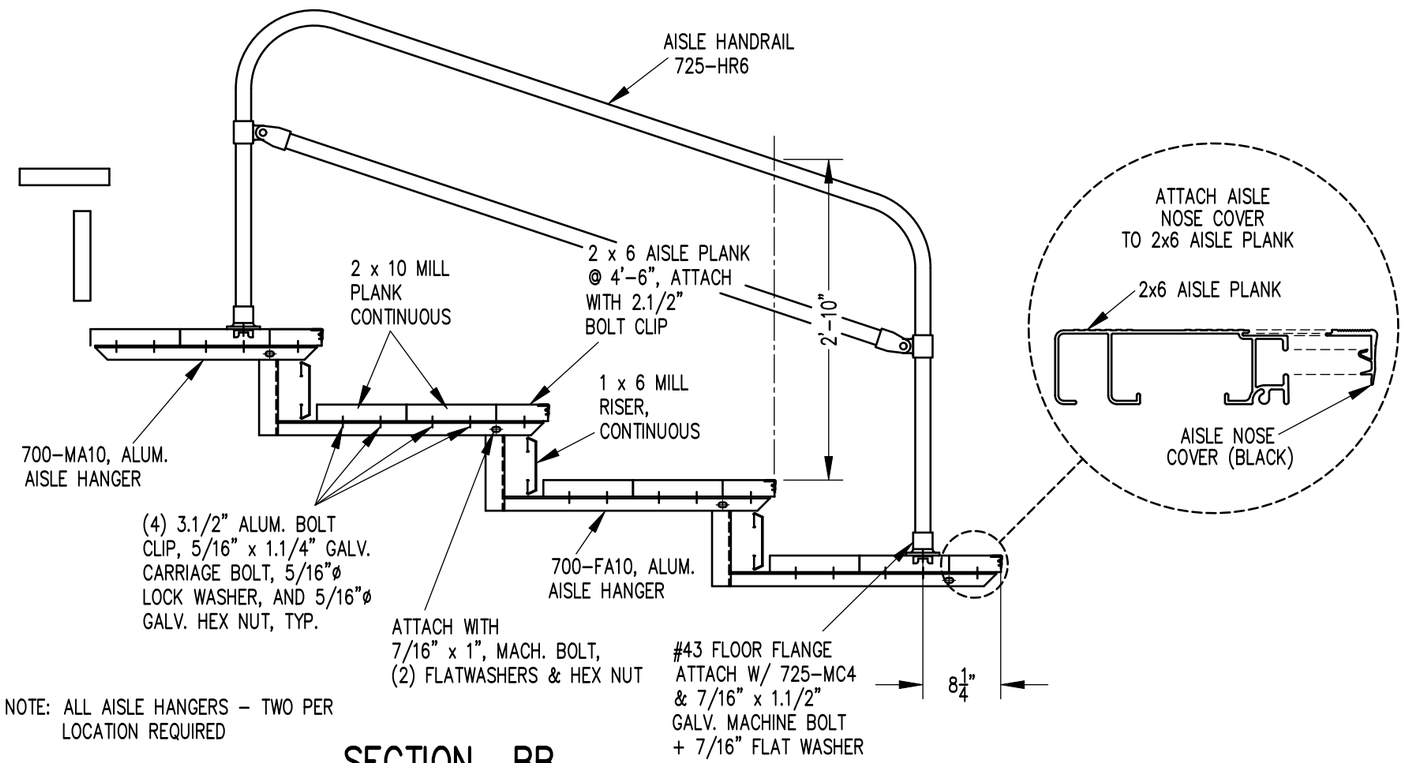


NOTE: ALL AISLE HANGERS - TWO PER LOCATION REQUIRED

## SECTION BB

3/4" = 1'-0"

Outdoor Aluminum
P.O. BOX 118
GENEVA, ALABAMA 36340
334-684-2296

| | | | |
|---|---|---|---|
| SCALE 3/4"=1'-0" | REVISIONS | BY | DATE |
| DATE 11/2/11 | ADJUSTED FOR FLANGE NUT | GDK | 05/24 |
| DR'N GDK CKD | | | |
| AP'VD | | | |
| TITLE DLW 5 ROW AISLE SECTION | | NO. 784-E1995 | |

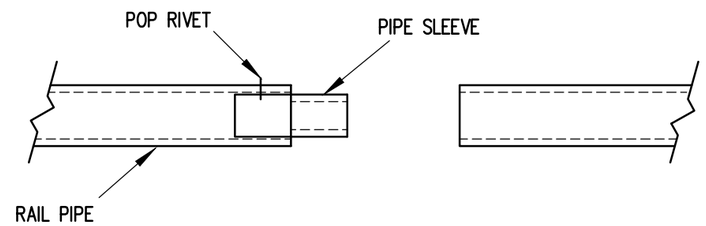


## PIPE SLEEVE ASSEMBLY

1.1/2" = 1' 0"

1) INSERT PIPE SLEEVE APPROXIMATELY HALFWAY INTO THE RAIL PIPE. FASTEN PIPE SLEEVE WITH (1) ALUMINUM POP RIVET (5/32" X 5/8")

2) SLIDE THE END OF THE ADJOINING RAILPIPE OVER THE PIPE SLEEVE UNTIL THE TWO RAILS ARE FLUSH.

NOTE: PIPE SLEEVES SHOULD BE ATTACHED ON ONLY ONE END TO ALLOW FOR EXPANSION.

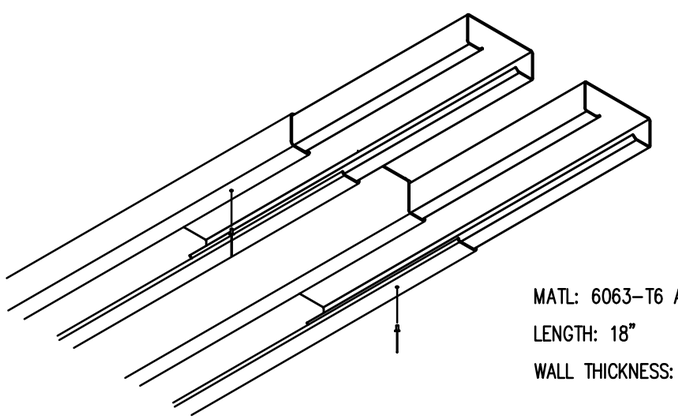

MATL: 6063-T6 ALUMN.

LENGTH: 18"

WALL THICKNESS: .062"

1) INSERT SLEEVES APPROXIMATELY HALFWAY INTO THE PLANK WITH THE ENDS STAGGERED ABOUT 1/2". FASTEN SLEEVE WITH (1) ALUMINUM POP RIVET.

2) SLIDE THE END OF THE ADJOINING PLANK OVER THE SLEEVES UNTIL THE TWO PLANKS ARE SNUG.

NOTE: SLEEVES SHOULD BE ATTACHED ON ONLY ONE END TO ALLOW FOR EXPANSION.

## PLANK SPLICE SLEEVE ASSEMBLY

(TYP. @ ALL PLANK SPLICES)

Outdoor Aluminum
P.O. BOX 118
GENEVA, ALABAMA 36340
334-684-2296

| | | | |
|---|---|---|---|
| SCALE AS NOTED | REVISIONS | BY | DATE |
| DATE 11/2/11 | | | |
| DR'N GDK / CKD | | | |
| AP'VD | | | |
| TITLE SPLICE SLEEVE ASSEMBLY | | NO. 784-E1994 | |

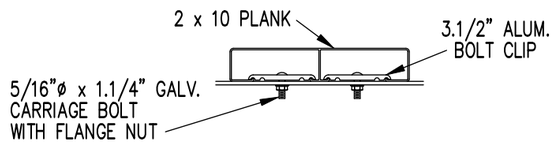


## BOLT CLIP DETAIL

1.1/2" = 1'-0"

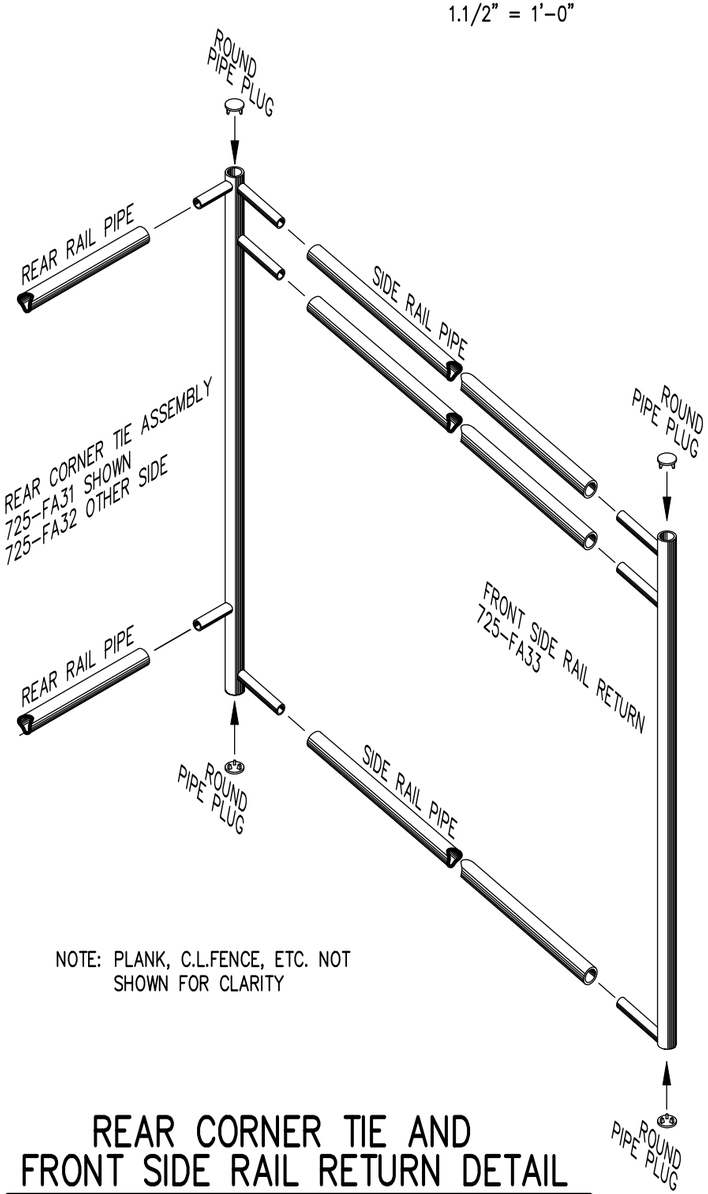


NOTE: PLANK, C.L.FENCE, ETC. NOT SHOWN FOR CLARITY

## REAR CORNER TIE AND FRONT SIDE RAIL RETURN DETAIL

3/4" = 1'-0"

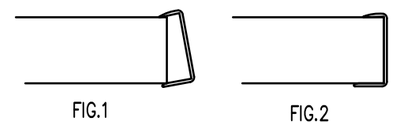


1) LOCATE THE CHANNEL END CAP AS SHOWN IN FIG. 1.

2) TAP END CAP INTO PLACE WITH RUBBER MALLET OR SOFT WOOD. FIG.2

3) DRILL 5/32" HOLES THROUGH THE BOTTOM FLANGE AND THE BOTTOM OUTSIDE PLANK FLANGES OF EACH PLANK. INSTALL 5/32" POP RIVETS.

## END CAP DETAIL

N.T.S.

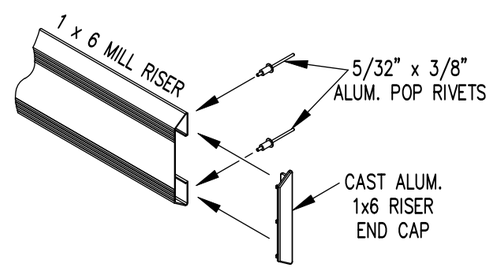


## 1 x 6 RISER END CAP

N.T.S.

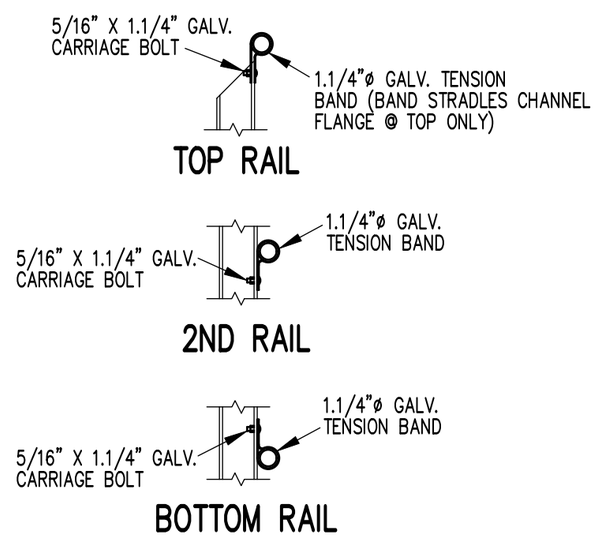


## RAIL PIPE ATTACHMENT

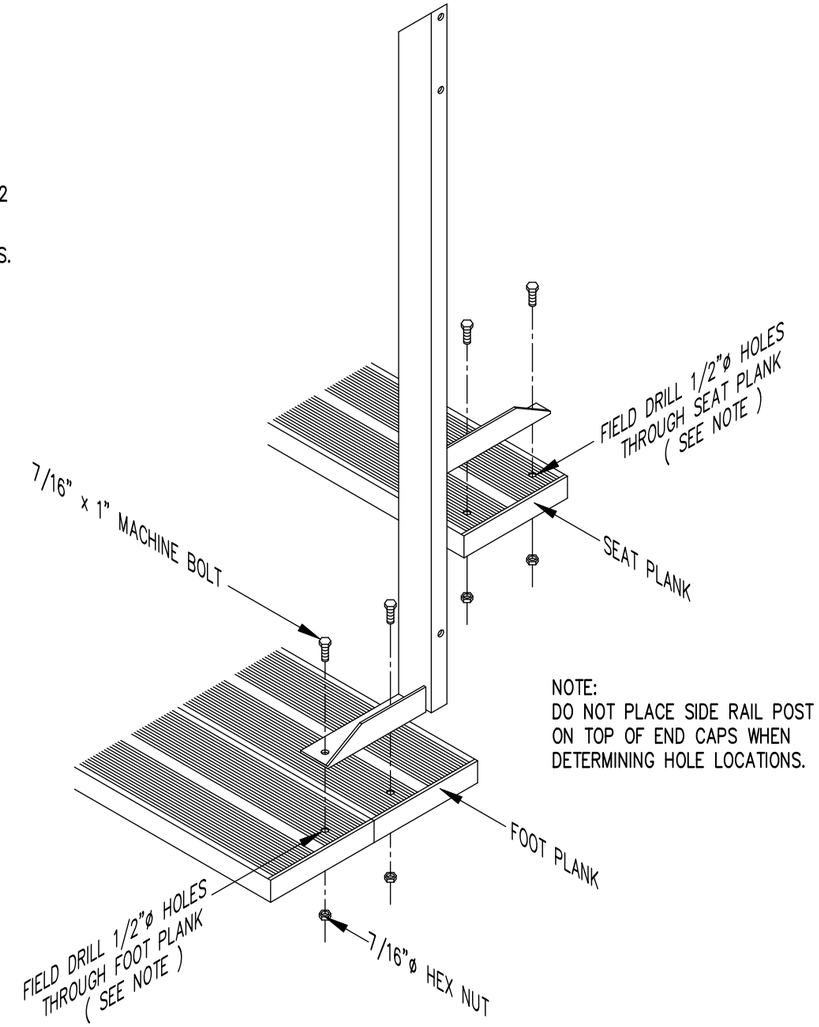


NOTE:
DO NOT PLACE SIDE RAIL POST ON TOP OF END CAPS WHEN DETERMINING HOLE LOCATIONS.

## TYP. SIDE RAIL POST ATTACHMENT

1" = 1'-0"

Outdoor Aluminum
P.O. BOX 118
GENEVA, ALABAMA 36340
334-684-2296

| SCALE AS NOTED | REVISIONS | BY | DATE |
|---|---|---|---|
| DATE 11/2/11 | ADJUSTED FOR FLANGE NUT | GDK | 5/24 |
| DR'N GDK CKD | | | |
| AP'VD | | | |

TITLE: TYPICAL DETAILS

NO. 784-E1990