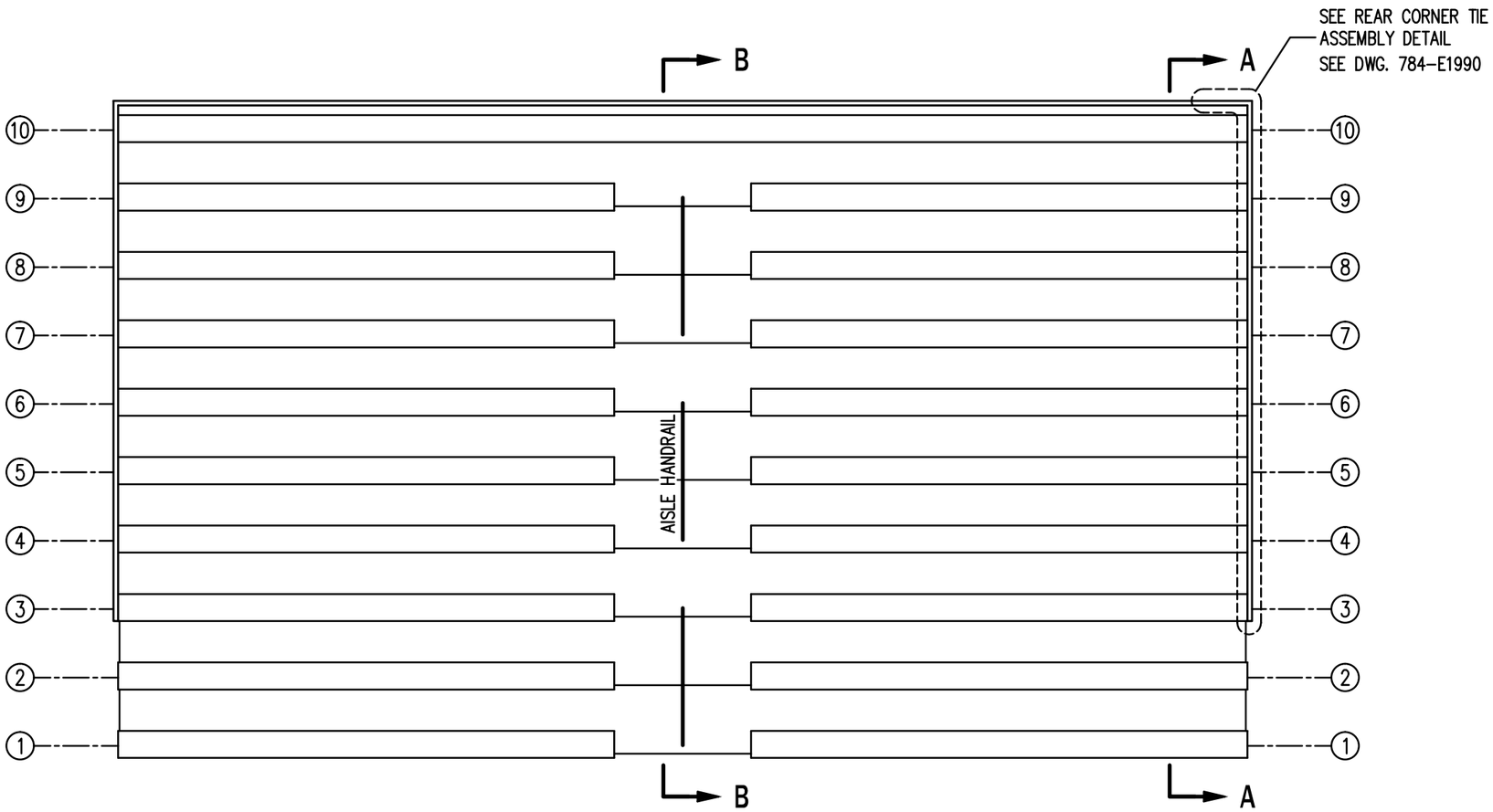

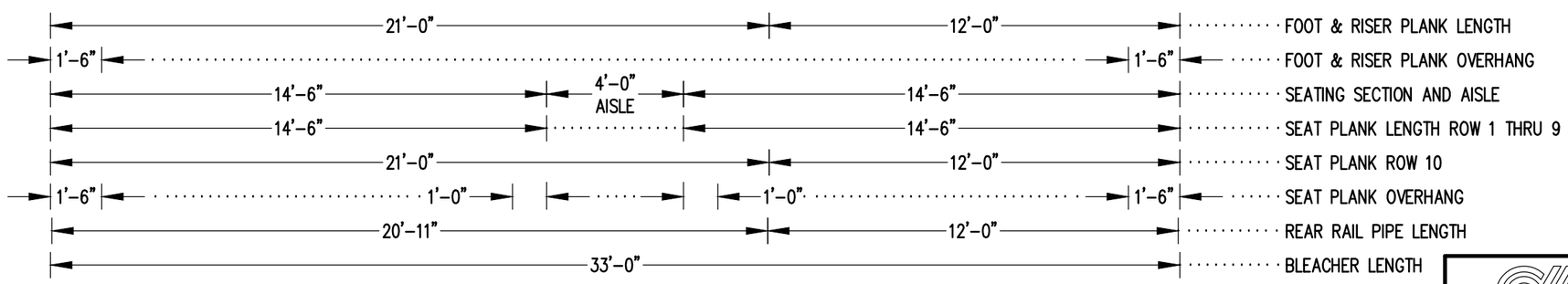

SEATING PLAN

1/4" = 1'-0"

184 NET SEATS @ 18" PER SEAT

Outdoor Aluminum
P.O. BOX 118
GENEVA, ALABAMA 36340
334-684-2296

SCALE AS NOTED	REVISIONS	BY	DATE
DATE 11/2/11			
DR'N GDK / CKD			
AP'VD			

TITLE: DLW 10-33 SEATING PLAN

NO. 784-E2118

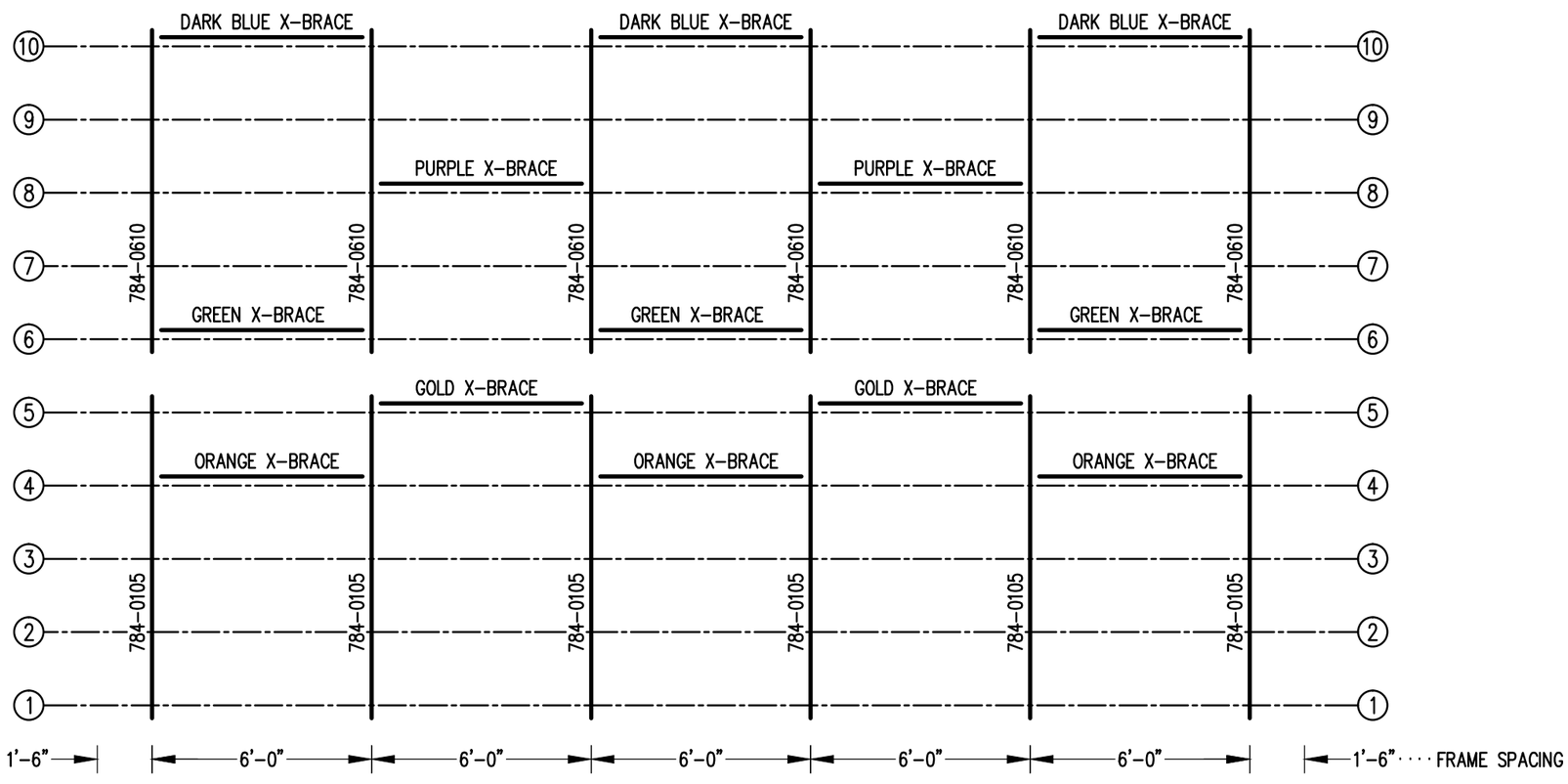

FRAMING PLAN

1/4" = 1'-0"

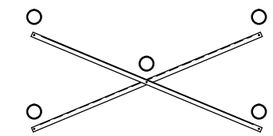

X-BRACE DETAIL

N.T.S.

○ 7/16" X 1" GALV. MACH. BOLT

△ 7/16" X 1.1/2" GALV. MACH. BOLT

Outdoor Aluminum
P.O. BOX 118
GENEVA, ALABAMA 36340
334-684-2296

SCALE AS NOTED	REVISIONS	BY	DATE
DATE 11/2/11			
DR'N GCK / CKD			
AP'VD			
TITLE DLW 10-33 FRAMING PLAN		NO. 784-E2158	

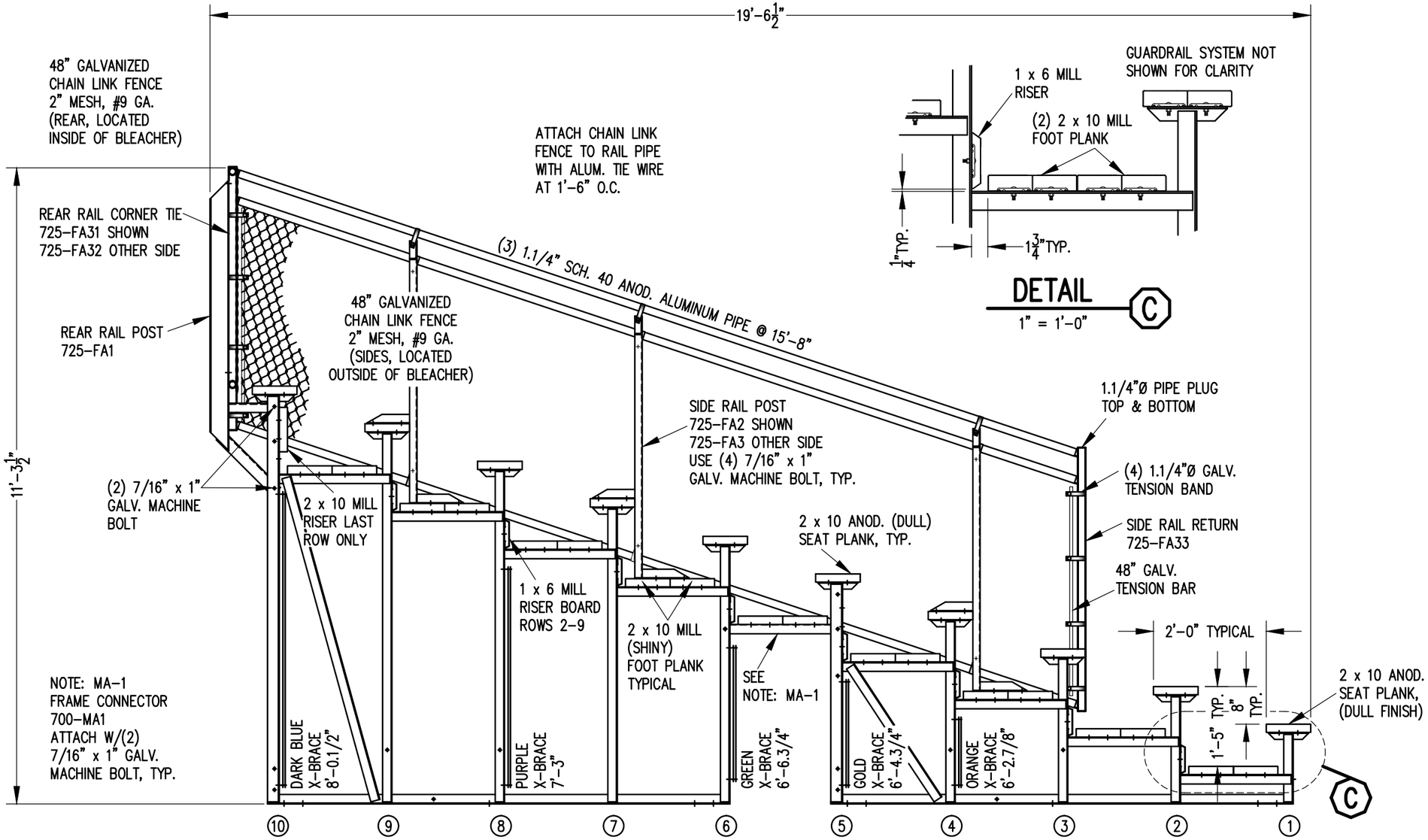

SECTION AA

1/2" = 1'-0"

DETAIL C

1" = 1'-0"

Outdoor Aluminum

P.O. BOX 118
GENEVA, ALABAMA 36340
334-684-2296

SCALE 1/2"=1'-0"	REVISIONS	BY	DATE
DATE 11/2/11			
DR'N GDK / CKD			
AP'VD			
TITLE DLW 10 ROW SECTION		NO. 784-E2123	

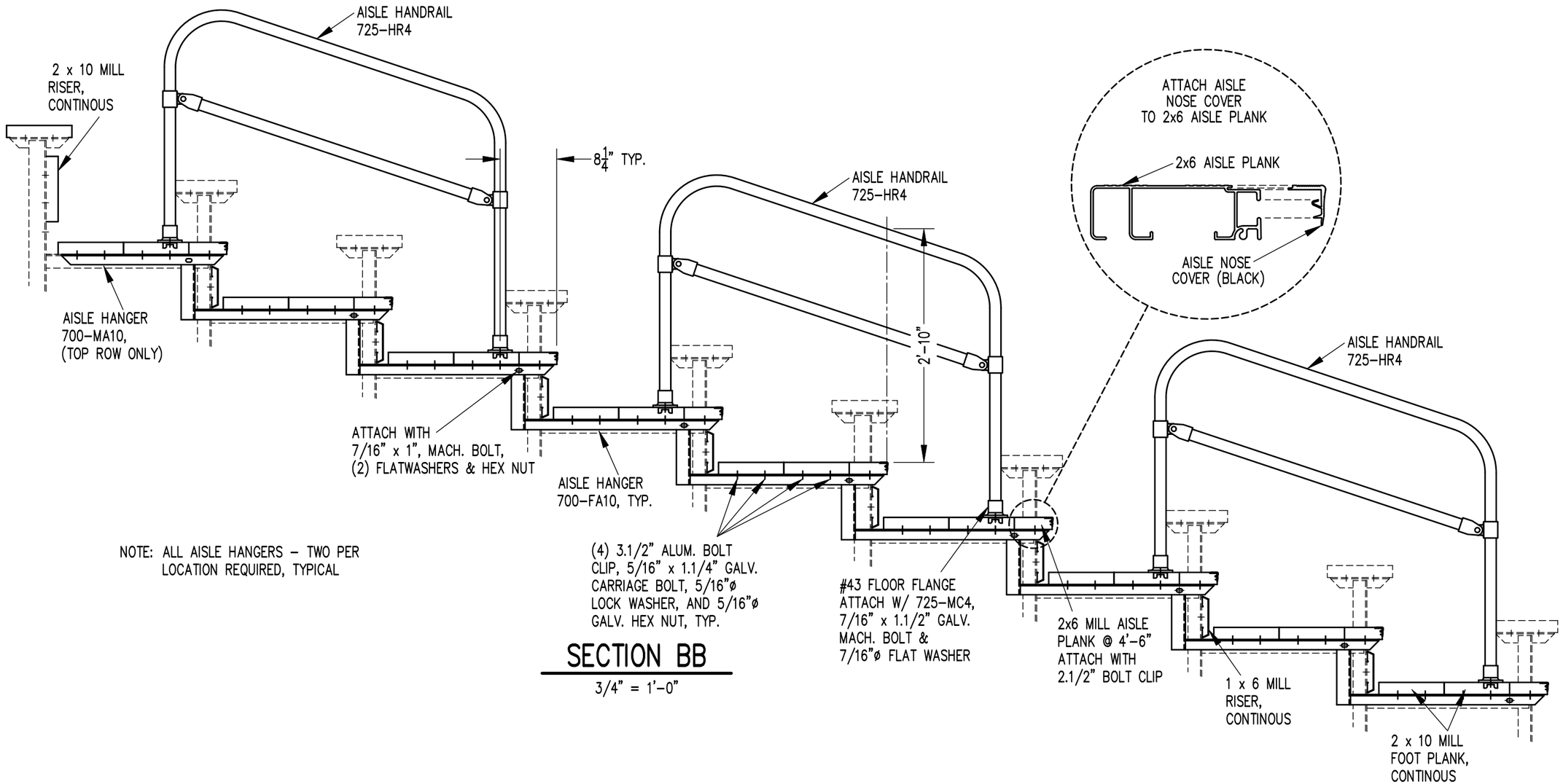

NOTE: ALL AISLE HANGERS – TWO PER LOCATION REQUIRED, TYPICAL

SECTION BB

3/4" = 1'-0"

Outdoor Aluminum
P.O. BOX 118
GENEVA, ALABAMA 36340
334-684-2296

SCALE 3/4"=1'-0"	REVISIONS	BY	DATE
DATE 11/2/11	ADJUSTED FOR FLANGE NUT	GDK	05/24
DR'N GDK CKD			
AP'VD			
TITLE DLW 10 ROW AISLE SECTION		NO. 784-E1996	

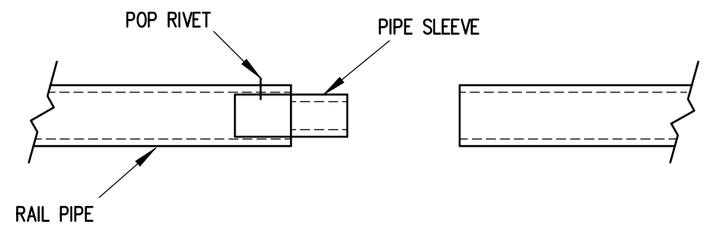

PIPE SLEEVE ASSEMBLY

1.1/2" = 1' 0"

1) INSERT PIPE SLEEVE APPROXIMATELY HALFWAY INTO THE RAIL PIPE. FASTEN PIPE SLEEVE WITH (1) ALUMINUM POP RIVET (5/32" X 5/8")

2) SLIDE THE END OF THE ADJOINING RAILPIPE OVER THE PIPE SLEEVE UNTIL THE TWO RAILS ARE FLUSH.

NOTE: PIPE SLEEVES SHOULD BE ATTACHED ON ONLY ONE END TO ALLOW FOR EXPANSION.

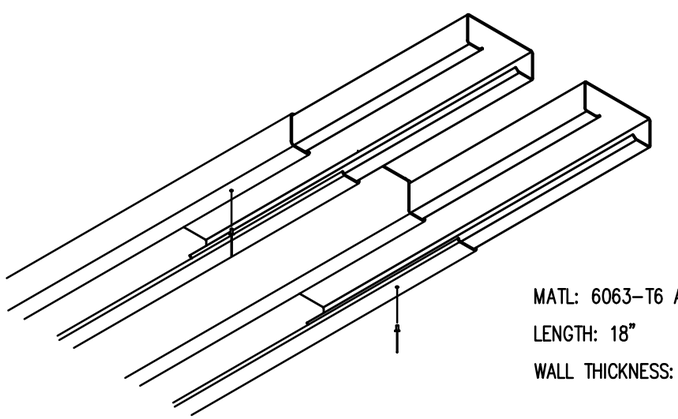

MATL: 6063-T6 ALUMN.

LENGTH: 18"

WALL THICKNESS: .062"

1) INSERT SLEEVES APPROXIMATELY HALFWAY INTO THE PLANK WITH THE ENDS STAGGERED ABOUT 1/2". FASTEN SLEEVE WITH (1) ALUMINUM POP RIVET.

2) SLIDE THE END OF THE ADJOINING PLANK OVER THE SLEEVES UNTIL THE TWO PLANKS ARE SNUG.

NOTE: SLEEVES SHOULD BE ATTACHED ON ONLY ONE END TO ALLOW FOR EXPANSION.

PLANK SPLICE SLEEVE ASSEMBLY

(TYP. @ ALL PLANK SPLICES)

Outdoor Aluminum
P.O. BOX 118
GENEVA, ALABAMA 36340
334-684-2296

SCALE AS NOTED	REVISIONS	BY	DATE
DATE 11/2/11			
DR'N GDK / CKD			
AP'VD			
TITLE SPLICE SLEEVE ASSEMBLY		NO. 784-E1994	

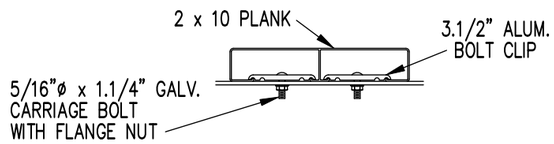

BOLT CLIP DETAIL

1.1/2" = 1'-0"

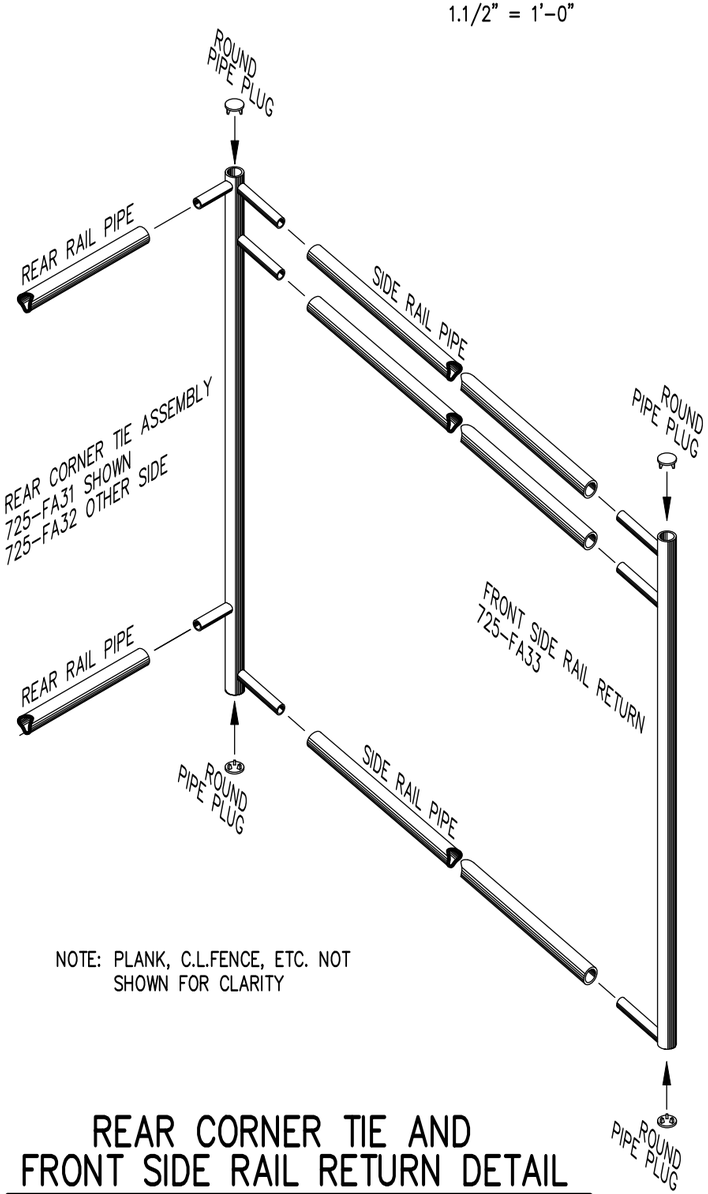

NOTE: PLANK, C.L.FENCE, ETC. NOT SHOWN FOR CLARITY

REAR CORNER TIE AND FRONT SIDE RAIL RETURN DETAIL

3/4" = 1'-0"

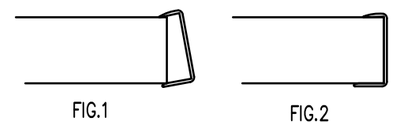

1) LOCATE THE CHANNEL END CAP AS SHOWN IN FIG. 1.

2) TAP END CAP INTO PLACE WITH RUBBER MALLET OR SOFT WOOD. FIG.2

3) DRILL 5/32" HOLES THROUGH THE BOTTOM FLANGE AND THE BOTTOM OUTSIDE PLANK FLANGES OF EACH PLANK. INSTALL 5/32" POP RIVETS.

END CAP DETAIL

N.T.S.

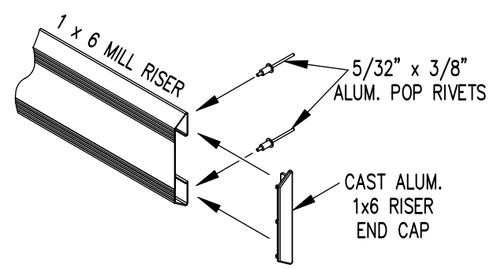

1 x 6 RISER END CAP

N.T.S.

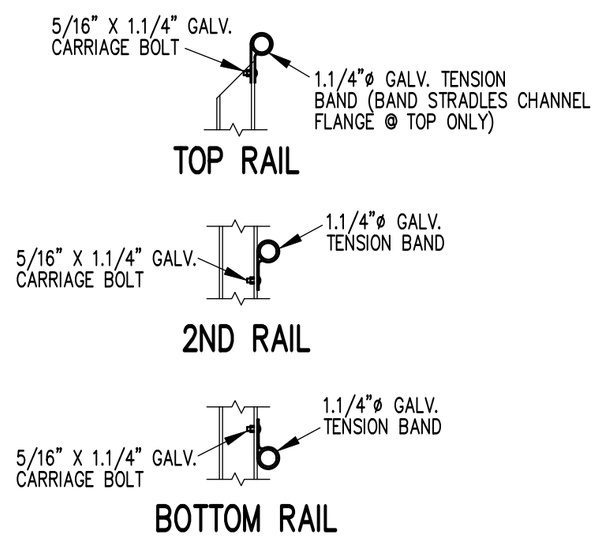

RAIL PIPE ATTACHMENT

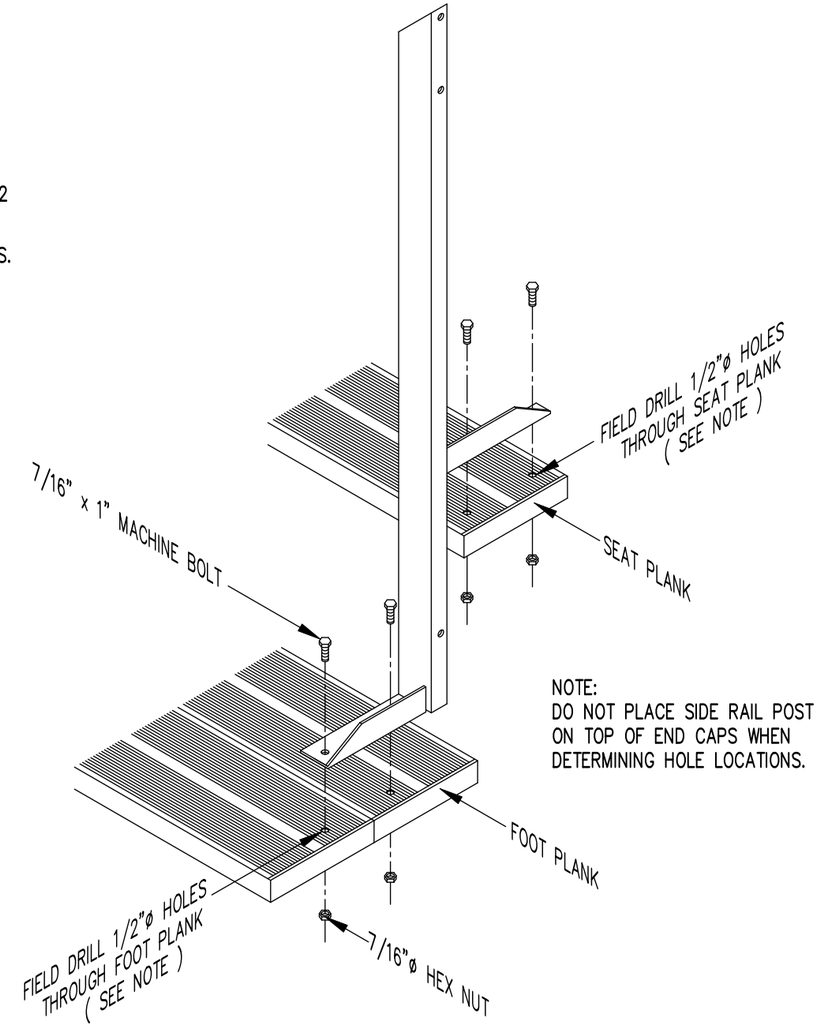

NOTE:
DO NOT PLACE SIDE RAIL POST ON TOP OF END CAPS WHEN DETERMINING HOLE LOCATIONS.

TYP. SIDE RAIL POST ATTACHMENT

1" = 1'-0"

Outdoor Aluminum
P.O. BOX 118
GENEVA, ALABAMA 36340
334-684-2296

SCALE AS NOTED	REVISIONS	BY	DATE
DATE 11/2/11	ADJUSTED FOR FLANGE NUT	GDK	5/24
DR'N GDK CKD			
AP'VD			

TITLE: TYPICAL DETAILS

NO. 784-E1990