PLEASE READ THROUGH INSTRUCTIONS ONCE BEFORE ASSEMBLING

(1) SLIP ON CHANNEL END CAPS (ONE ON EACH END OF PLANK). IF NECESSARY, TAP LIGHTLY WITH A WOOD BLOCK OR RUBBER MALLET. TAP ONLY ON THE CORNERS OF THE CHANNEL END CAPS. THE LONG LEG OF CHANNEL END CAPS SHOULD BE PLACED ON THE UNDERSIDE OF PLANK. DRILL 5/32"ø HOLES THROUGH CHANNEL END CAPS AND PLANK AS SHOWN ON ON DRAWING AND ATTACH WITH POP RIVETS. REPEAT ON OTHER END.

(2) LAY PCTGH FRAMES ON FIRM LEVEL GROUND, APPROXIMATELY SIX FEET APART. STAND FRAMES UPRIGHT ON THEIR BACKS, SO THAT SEAT TUBES ARE APPROXIMATELY IN THE VERTICAL POSITION. PLACE 2 x 10 BACK PLANK AGAINST FRAMES SO THAT THE PLANK DOES NOT OVERHANG THE END MOST FRAMES MORE THAN 1'–6" (3" MIN. TO 1'–6" MAX.) SEE DRAWING FOR FURTHER CLARIFICATION.

(3) ATTACH PCTGH FRAMES TO BOTTOM SIDE OF BACKREST PLANK USING 2 BOLT CLIPS, 5/16" x 3.1/2" CARRIAGE BOLTS AND FLANGE NUTS. MAKE SURE THAT FRAMES ARE PERPENDICULAR TO BACKREST PLANK. SEE BOLT CLIP DETAIL.

(4) PLACE 2 x 12 SEAT PLANK AGAINST PCTGH FRAMES SO THAT THE PLANKS DO NOT OVERHANG THE END MOST FRAMES MORE THAN 1'–6" (3" MIN. TO 1'–6" MAX.) SEE DRAWING FOR FURTHER CLARIFICATION.

(5) ATTACH PCTGH FRAMES TO BOTTOM SIDE OF SEAT PLANKS USING 2 BOLT CLIPS, 5/16" x 3.1/2" CARRIAGE BOLTS AND FLANGE NUTS, MAKING SURE THAT FRAMES ARE PERPENDICULAR TO SEAT PLANKS. SEE BOLT CLIP DETAIL.

(6) TIGHTEN ALL BOLTS.

(7) MEASURE THE EXACT DISTANCE BETWEEN FRAMES OF THE ASSEMBLED BENCH. MEASURE AND MARK THESE DISTANCES ON THE GROUND.

(8) DIG HOLES AT THE DESIGNATED LOCATIONS AND POUR READY–MIX CONCRETE INTO THE HOLES.

(9) TURN THE BENCH UPRIGHT AND PLACE THE LEGS IN THE PREPARED CONCRETE. POSITION THE HEIGHT OF BENCH SO THAT THE SEAT PLANK SURFACE IS 17" TO 18" ABOVE GROUND LEVEL. SHORE ASSEMBLED UNIT AS REQUIRED UNTIL CONCRETE HAS ADEQUATELY CURED, TO ALLOW BENCH TO STAND ON ITS OWN.

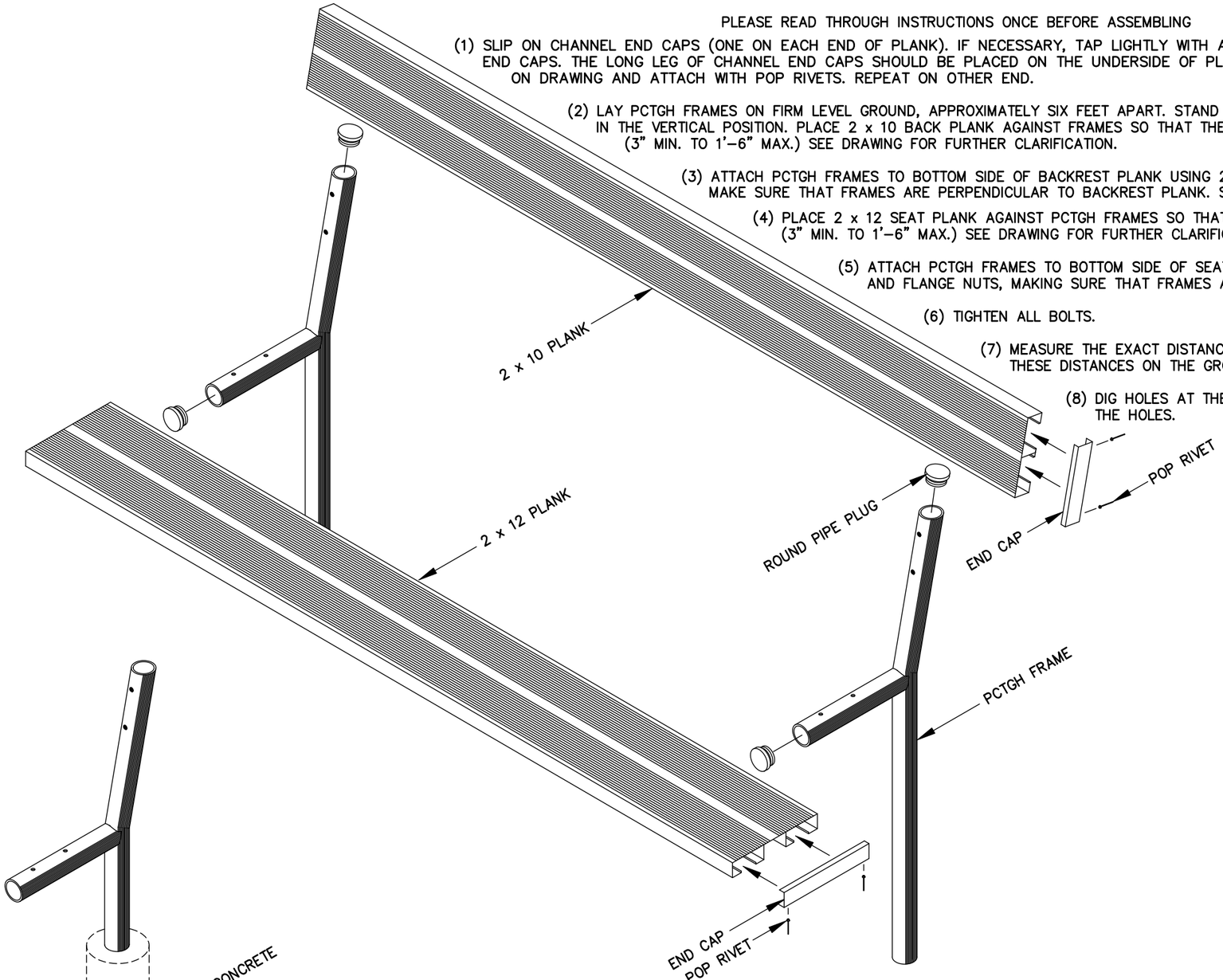

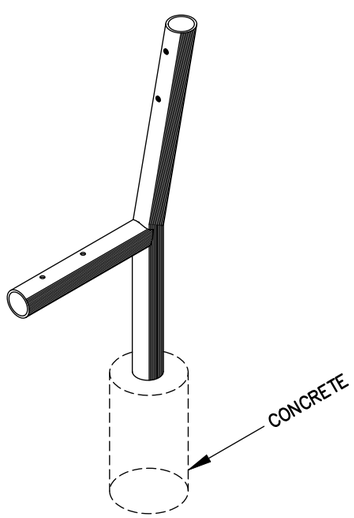

INSTALLATION DETAIL

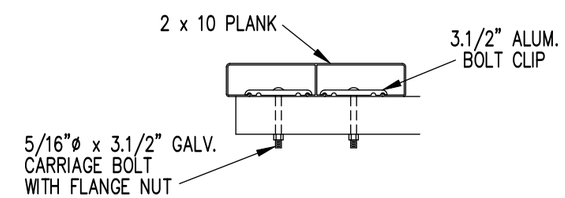

BOLT CLIP DETAIL

1.1/2" = 1'–0"

Outdoor Aluminum
P.O. BOX 118
GENEVA, ALABAMA 36340
334–684–2296

SCALE N.T.S.	REVISIONS	BY	DATE
DATE 11/21/00	SEAT FROM OAX–025 TO OAX–055	GDK	02/23/01
DR'N CHM CKD	BACKREST FROM OAX–035 TO OAX–045	GDK	02/23/01
AP'VD	ADJUSTED FOR FLANGE NUTS	GDK	05/07/24

TITLE: PCTGH BENCH

NO. 300–E74